Electrolux PROFESSIONAL

Modular Cooking Range Line 700XP Two Wells Freestanding Gas Fryer 7 liter

ITEM #

MODEL #

NAME #

SIS #

AIA #

371069 (E7FRGH2BF0) 7+7-lt gas Fryer free standing with 2 "V" shape wells (external burners), 2 baskets and lids included

Short Form Specification

Item No.

To be installed on height adjustable feet in stainless steel. Two high efficiency 7 kW burners in stainless steel. Suitable for natural gas or LPG. Deep drawn V-shaped well. Oil drains through a tap into a container under the well. Exterior panels in stainless steel with Scotch Brite finish. One piece pressed work top in 1.5 mm thick stainless steel. Right-angled side edges to allow flush-fitting junction between units.

APPROVAL:

Main Features

- Unit to be mounted on 50mm height adjustable feet in stainless steel.
- Deep drawn V-Shaped wells.
- Two high efficiency 7 kW burners in stainless steel with flame failure device attached to the outside of the well.
- Thermostatic regulation of oil temperature up to a maximum of 185 °C.
- Flame failure device on each burner.
- Overheat protection thermostat as standard on all units.
- Oil drains through a tap into a drainage container positioned under the well.
- All major compartments located in front of unit for ease of maintenance.
- Piezo spark ignition for added safety.
- Gas appliance supplied for use with natural or LPG gas, conversion jets supplied as standard.
- IPx4 water protection.
- Optional portable oil quality monitoring tool (code 9B8081) for efficient oil management.

Construction

- Interior of well with rounded corners for ease of cleaning.
- All exterior panels in Stainless Steel with Scotch Brite finishing.
- One piece pressed 1.5 mm work top in Stainless steel.
- Model has right-angled side edges to allow flush fitting joints between units, eliminating gaps and possible dirt traps.

Sustainability

- This model is compliant with Swiss Energy Efficiency Ordinance (730.02).

Included Accessories

- 2 of Door for open base cupboard — PNC 206350
- 2 of Basket for 7lt top and free standing fryers — PNC 921608

Optional Accessories

- Junction sealing kit — PNC 206086 ❑
- Draught diverter, 150 mm diameter — PNC 206132 ❑
- Matching ring for flue condenser, 150 mm diameter — PNC 206133 ❑
- Kit 4 wheels - 2 swivelling with brake - it is mandatory to install Base support and wheels — PNC 206135 ❑
- Flanged feet kit — PNC 206136 ❑
- Frontal kicking strip for concrete installation, 800mm — PNC 206148 ❑
- Frontal kicking strip for concrete installation, 1000mm — PNC 206150 ❑

• Frontal kicking strip for concrete installation, 1200mm	PNC 206151	❑
• Frontal kicking strip for concrete installation, 1600mm	PNC 206152	❑
• Frontal kicking strip, 800mm (not for refr-freezer base)	PNC 206176	❑
• Frontal kicking strip, 1000mm (not for refr-freezer base)	PNC 206177	❑
• Frontal kicking strip, 1200mm (not for refr-freezer base)	PNC 206178	❑
• Frontal kicking strip, 1600mm (not for refr-freezer base)	PNC 206179	❑
• Kit 4 feet for concrete installation (not for 900 line free standing grill)	PNC 206210	❑
• Flue condenser for 1 module, 150 mm diameter	PNC 206246	❑
• Pair of side kicking strips	PNC 206249	❑
• Pair of side kicking strips for concrete installation	PNC 206265	❑
• Chimney upstand, 800mm	PNC 206304	❑
• Right and left side handrails	PNC 206307	❑
• Back handrail 800 mm	PNC 206308	❑
• Door for open base cupboard	PNC 206350	❑
• Base support for feet or wheels - 800mm (700/900)	PNC 206367	❑
• Base support for feet or wheels - 1200mm (700/900)	PNC 206368	❑
• Base support for feet or wheels - 1600mm (700/900)	PNC 206369	❑
• Base support for feet or wheels - 2000mm (700/900)	PNC 206370	❑
• Rear paneling - 800mm (700/900)	PNC 206374	❑
• Rear paneling - 1000mm (700/900)	PNC 206375	❑
• Rear paneling - 1200mm (700/900)	PNC 206376	❑
• Chimney grid net, 400mm (700XP/900)	PNC 206400	❑
• Kit G.25.3 (NI) gas nozzles for 900 fryers	PNC 206467	❑
• 2 side covering panels for free standing appliances	PNC 216000	❑
• Basket for 7lt top and free standing fryers	PNC 921608	❑
• Filter for fryer oil collection basin for 7lt, 14lt, 15lt free standing fryers	PNC 921693	❑
• Pressure regulator for gas units	PNC 927225	❑

The company reserves the right to make modifications to the products without prior notice. All information correct at time of printing.

2024.10.06

Modular Cooking Range Line 700XP Two Wells Freestanding Gas Fryer 7 liter

Front

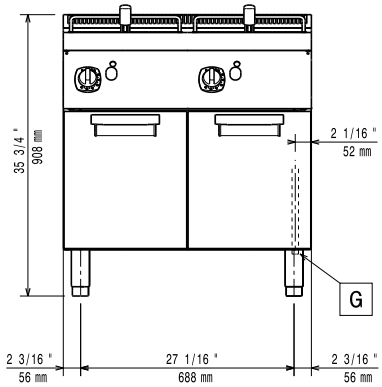

Side

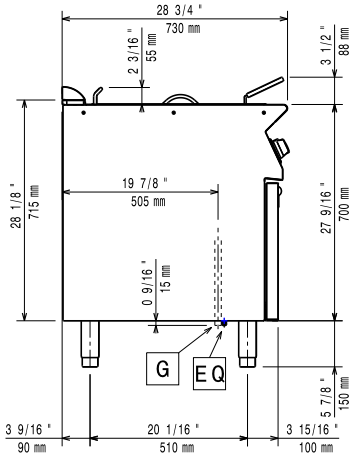

EQ = Equipotential screw
G = Gas connection

Top

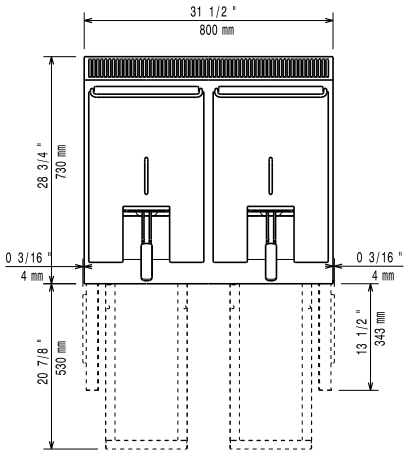

Gas

Gas Power:	
371069 (E7FRGH2BF0)	14 kW
Standard gas delivery:	Natural Gas G20 (20mbar)
Gas Type Option:	LPG;Natural Gas
Working pressure, mBar (min/Max):	0 / 0
Gas Inlet:	1/2"

Key Information:

Usable well dimensions (width):	240 mm
Usable well dimensions (height):	235 mm
Usable well dimensions (depth):	380 mm
Well capacity:	5.5 lt MIN; 7 lt MAX
Thermostat Range:	105 °C MIN; 185 °C MAX
Net weight:	71 kg
Shipping weight:	82 kg
Shipping height:	1130 mm
Shipping width:	820 mm
Shipping depth:	860 mm
Shipping volume:	0.8 m³

If appliance is set up or next to or against temperature sensitive furniture or similar, a safety gap of approximately 150 mm should be maintained or some form of heat insulation fitted.

Certification group:	N7FG

The company reserves the right to make modifications to the products without prior notice. All information correct at time of printing.